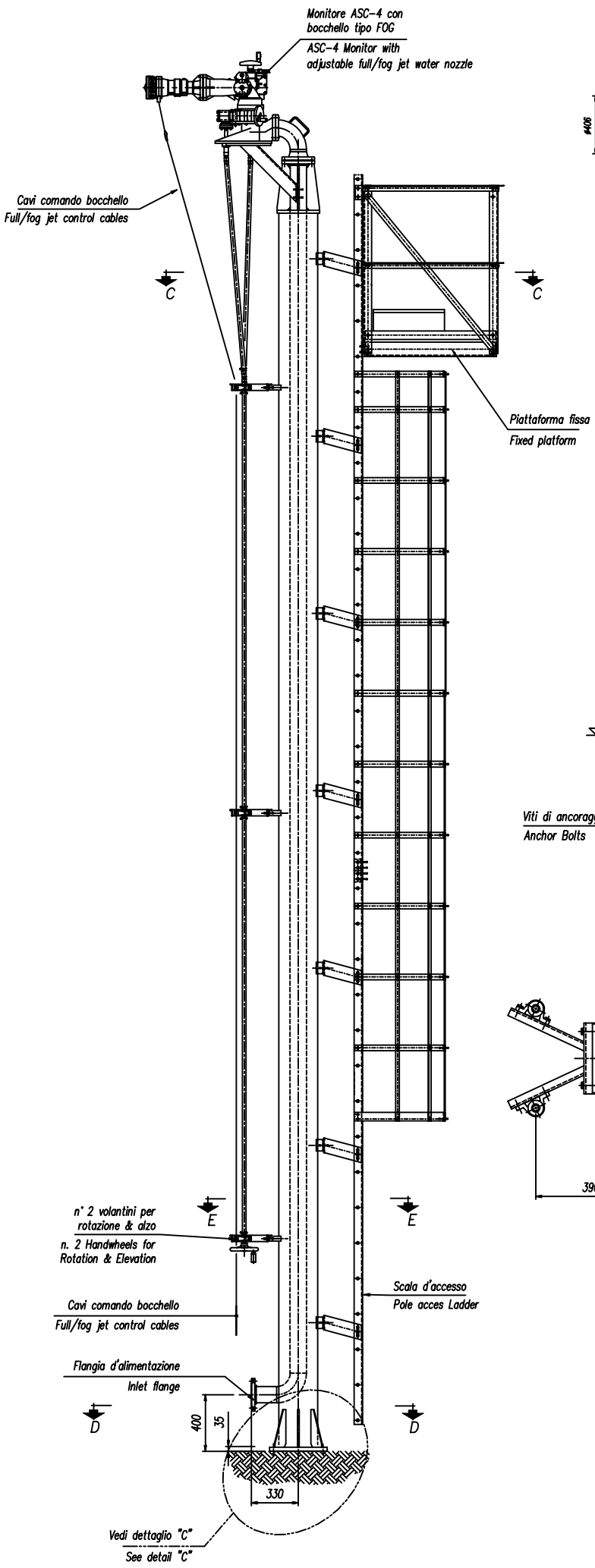

DET. "D"

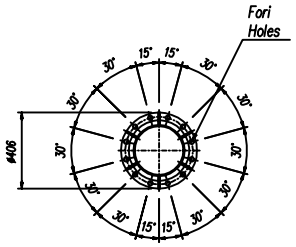

SEZIONE "D-D"
SECTION "D-D"

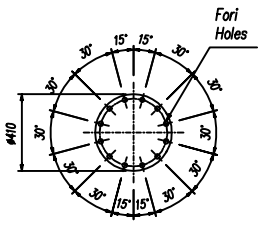

CONTROFLANGIA
MASK PLATE
ø 410 thk. 10

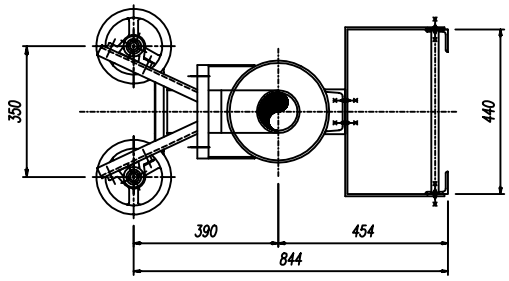

SEZIONE E-E
SECTION E-E

DET. "C"

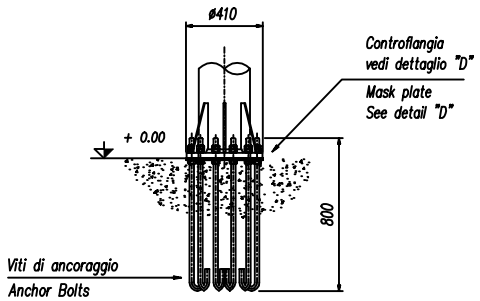

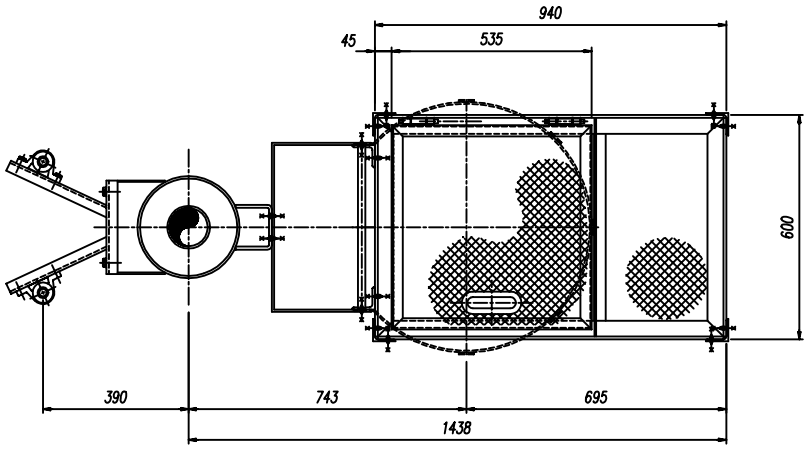

SEZIONE C-C
SECTION C-C

Rev.	Date	Description	Drawn	Checked	Approved
0	15.05.2000	Emesso – Issued	MS	MB	

CACCIALANZA & C. S.p.A.
ANTINCENDIO SICUREZZA ANTINQUINAMENTO
SEGRATE (MILANO) - ITALY

Client / Project

Title
MONITORE TIPO ASC-4 CON BOCCH. FOG MONTATO SU PALO
ASSIEME GENERALE
MONITOR ASC-4 TYPE WITH FULL FOG ADJ. NOZZLE MOUNTED ON POLE
GENERAL ASSEMBLY

	Date	Name
Drawn	15.05.00	M. SPADA
Checked	15.05.00	M. BARBIERI
Approved		

Code	Sys.	Size	Scale	Dwg nr.	Rev.	Sheet
		A2	1:20	06976614	0	1 of 1

THIS DRAWING IS THE PROPERTY OF CACCIALANZA & C. S.p.A. AND IS NOT TO BE REPRODUCED OR USED TO FURNISH ANY INFORMATION FOR MAKING OF DRAWINGS OR APPARATUS EXCEPT WHERE PROVIDED FOR BY AGREEMENT WITH SAID COMPANY